S6 TrackPro Rev. D

Subject to alterations

Pictures may differ from original product.

TrackPro

The S6 TrackPro characterises a high flexibility trough the choice of the cellular radio options and the free programmability. Programming is simplified by using open source tools such as Eclipse or Netbeans, and by using sitec systems' S65X Framework, various software tools and training courses. The S6 TrackPro is is E1 and CE certified, and it forms the basis for many mobile applications.

There is a wide range of standard equipment, such as GSM/GPRS/UMTS, GNSS (GPS, GLONASS, Galileo), 3-axis acceleration sensor, 3-axis gyro sensor, dual CAN, optically isolated digital inputs/outputs, RS232 interface, I²C, 1-wire/LIN, KLine, USB. This predestines the S6 for vehicle applications. Additional, optional interfaces can be added if required using the internal Feature Connector (FC).

S6 Overview

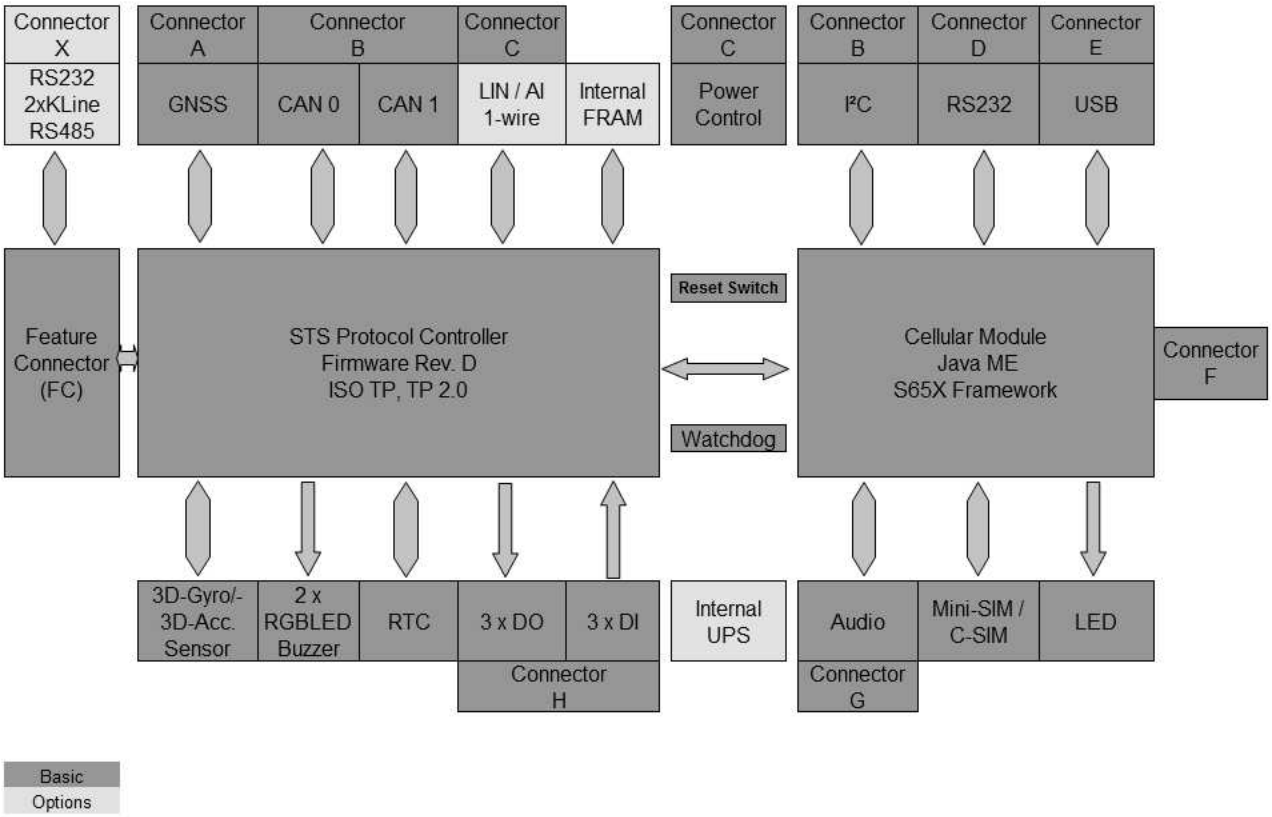

S6 TrackPro Rev. D

Subject to alterations

Product codes

S6240	GPRS, EDGE, GSM, 10 MB Flash, 5 MB RAM
S6300	UMTS, HSDPA, GPRS, EDGE, 10 MB Flash, 10 MB RAM

Characteristics

GPRS, EDGE, GSM	GSM 850/900/1800/1900 MHz EDGE Class 12 data rates, DL: max. 237 kbps, UL: max. 237 kbps GPRS Class 12 data rates, DL: max. 85.6 kbps, UL: max. 85.6 kbps CSD Data: up to 9.6 kbps V.110
UMTS, HSDPA, GPRS, EDGE	UMTS (WCDMA): 900/2100 MHz HSDPA DL Cat.8 / UL Cat.6, Dual Carrier, DL: max. 7.2 Mbps, UL: max. 5.76 Mbps GSM 900/1800 MHz EDGE Class 12 data rates, DL: max. 237 kbps, UL: max. 237 kbps GPRS Class 12 data rates, DL: max. 85.6 kbps, UL: max. 85.6 kbps CSD Data: up to 9.6 kbps V.110
General	SMS Point-to-point MO & MT, cell broadcast, Text/PDU mode Fax Group 3, class 2 / class 1 Control via AT commands TCP/IP stack access via AT commands Internet services: TCP Server/Client, UDP, HTTP, FTP, SMTP, POP3 RLS Monitoring (Jamming Detection)
SIM	SIM 1.8 V, 3 V – Mini SIM (accessible) or Component SIM
GNSS	GPS (L1), Glonass (L1, FDMA), Galileo (E1) NMEA, RTCM 32 Channel GPS architecture Optional with dead reckoning function Sensitivity: Acquisition: -146 dBm Navigation: -160 dBm Tracking: -162 dBm Positional accuracy: Position: (CEP50): 2.0 m Speed: < 0.05 m/s Heading: <0.3 deg Time to first fix (@ - 130 dBm) Hot start: 1 s Cold start: < 35 s EGNOS, WAAs and MSAS support A-GPS: Ephemeris file injection Jammer rejection Connector A: GNSS FAKRA blue or internal antenna
3-axis acceleration sensor 3-axis gyro sensor	Acceleration sensor: ±2g/±4g/±8g/±16g Adjustable thresholds Integrated self-test 10-13 bit resolution Beat and double beat recognition Motion detection and detection of standstill Detection of free fall

Subject to alterations

	Gyro sensor: 250/500/2000 degrees per second detection range 16 bit resolution
RS232	RS232 4-wire Usable as application interface, as programming interface and for updates Connector D: 9 poles SUB-D (f)
2 x CAN	CAN 2.0B, 1Mbps 2 receive buffers with priority message stores 6 29-bit filter 2 29-bit masks Connector B: Molex Micro-Fit 3.0, 2x4 pole
I²C	I²C 400 kbps Line driver up to 15 meter cable length Connector B: Molex Micro-Fit 3.0, 2x4 pole
DI/DO	3 digital inputs, optical isolated 3 digital outputs, optical isolated Internal signal transmitter 4 KHz Connector H: Molex Micro-Fit 3.0, 2x6 pole
LED	1 x GSM green (can be switched off) 2 x application RGB (programmable)
Protected key	Reset, on/off, factory default
Real Time Clock (RTC)	Buffered via accumulator or capacitor Holds time up to one year
Audio	Microphone and loudspeaker connection Basic hands-free operation Echo cancellation Noise reduction Connector G: RJ10 (4P4C)
USB	USB 2.0 full speed, 12 Mbps Connector E: USB Mini-B
Switch on via	Ignition input, RS232, USB, power supply, digital input, acceleration sensor, timer, button, CAN, FC add-ons
Power supply	7..42V DC (undervoltage protection: switch off at 6,8VDC / switch on at 8,6VDC) Optional: integrated accumulator Connector C: Molex Micro-Fit 3.0, 2x2 pole
Temperature range	Operation: -40℃ to +75℃ Switching of automatically at > 80℃ Storage: -40℃ to +85℃
Housing	Aluminium profile housing, black or aluminium colours Size: 105 x 60 x 25 mm Special designs upon request
Software / driver	Hard- and software watchdog Update via air interface for firmware and application S65X Framework
Tests/certifications/compliance	E1 046047, CE EN 55022/9.98+A1/10.00 +A2/1.03; RoHS FCC

S6 TrackPro Rev. D

Subject to alterations

Options

Accumulator	1.000..20.000 mAh charging connection with battery monitoring
FRAM	Up to 2048 kbit FRAM Non-volatile intermediate memory
LIN / 1-wire / AI	LIN 2.0/SAE J2602 compatible Master (default) (EME) max. 20 kbaud TXD Dominant Timeout Function LIN Bus Dominant Management 1-wire Master IO with active or passive 1-wire preload Standard- and overdrive 1-wire communication speed Analogue Input AD converter 12bit Voltage measuring range is configurable unipolar up to 12,288V, bipolar up to ±12,288V Voltage proof up to ±30V Than no FC extensions usable Connector C: Molex Micro-Fit 3.0, 2x2 pole

Extensions

FC101	FC COMM 485	RS485, I^2C
FC102	FC COMM ETH	100 Mbit Ethernet
FC103	FC FDR 2	8x AI, 4x DI, 1x RS232
FC104	FC KLINE	2x KLine

Antennae and cables

KA003-1003	GSM/GNSS antenna, dashboard	FAKRA 30cm cable
KA003-1030	GSM/GNSS antenna, dashboard	FAKRA 300cm cable
KA004-1030	GSM/GNSS antenna, window	FAKRA 300cm cable
KA006-1015	GSM/GNSS antenna, roof, IP67	FAKRA 150cm cable
KA006-1030	GSM/GNSS antenna, roof, IP67	FAKRA 300cm cable
K0001-0000	4 poles cable	Molex, 4 poles → open ends, 150cm cable
K0002-0000	8 poles cable	Molex, 8 poles → open ends, 150cm cable
K0003-0000	12 poles cable	Molex, 12 poles → open ends, 150cm cable
KN001-0000	Power supply	Plug-in power supply, Molex, 4 poles, 150cm cable

Information and contact

Producer
sitec systems GmbH
Ammonstraße 70
D-01067 Dresden

Phone: +49 (0)351 4812920
Fax: +49 (0)351 4828778
Mail: sales@sitec-systems.de
Web: www.sitec-systems.de

Service provider